SURE 静岡大学学術リポジトリ
Shizuoka University REpository

Observation of fast light in Mie scattering processes

著者	Totsuka Kouki, Tomita Makoto
journal or publication title	Physical Review E
volume	73
number	4
page range	045602-045602
year	2006-04
出版者	American Physical Society
権利	(c)2006 The American Physical Society
URL	http://hdl.handle.net/10297/599

doi: 10.1103/PhysRevE.73.045602

PHYSICAL REVIEW E **73**, 045602(R) (2006)

Observation of fast light in Mie scattering processes

Kouki Totsuka and Makoto Tomita
[1]*Department of Physics, Faculty of Science, Shizuoka University, 836 Ohya, Suruga-ku, Shizuoka 422-8529, Japan*
(Received 26 December 2005; published 14 April 2006)

We observed −4.9 nsec negative group delay in the optical wave-packet propagation through a fiber taper coupled with a single Mie sphere. The observed fast light under the Mie scattering process agrees excellently with the anomalous dispersion calculated on the basis of a directional coupling theory on the undercoupling condition, which also predicts a positive group delay on the overcoupling condition.

DOI: 10.1103/PhysRevE.73.045602 PACS number(s): 42.25.Bs, 42.25.Fx

Light scattering explains why the sky is blue, or even a striking contrast of the white clouds. The treatment of light scattering in small particles is a problem of electromagnetic theory. Historically, Mie has analyzed resonance scattering and obtained an analytical solution of electromagnetic modes within a microsphere, which are referred to as whispering gallery modes (WGMs) [1]. The mode indexes are completely assigned with radial, angular, azimuth, and polarization indexes which are similar to those used to characterize a simple atomic system. In WGMs, light is trapped in the circular orbits near the surface and the microsphere can act as an excellent optical cavity with ultrahigh Q factors. Mie resonances have been becoming much more important in current photonics, since the small cavities have the potential for investigations of fundamental physics, such as cavity quantum electrodynamics effects [2,3], or in more applied areas, such as nonlinear optical effects, near field sensors, or photonic devices [4,5]. Periodic arrays of Mie spheres are also a potential, since they could provide the nature of photonic crystal, showing band gaps and exotic dispersion effects.

Propagation velocity of light is another fundamental subject. Several concepts such as phase, group, energy, front, and signal velocities have been proposed to describe the wave propagation. Among them, the conventional group velocity, as well as the extended concept of net group and reshaping delays, is a very useful method to describe wave-packet propagation in dispersive medium [6,7]. It has been shown that even in a case of superluminal, or negative velocity, the pulse peak could appear exactly at the time predicted by the group velocity. Superluminal pulse propagation has been experimentally observed through resonant absorber [8], single-photon tunneling [9], birefringent photonic crystals [10], etc., and have been attracting renewed interest, specifically, in the context of information velocity [7,11–13].

In this communication, we present an evident observation of fast light associated with a single Mie scattering process. Specifically, we observed a negative group delay in the propagation of a nearly Gaussian-shaped pulse through fiber taper coupled with ultrahigh-Q Mie sphere. Scattering is a very universal phenomenon in physics; hence the results could be important in various fields. The enhanced, as well as reduced, light velocity in scattering medium is important not only in the single scattering process but also in a collection of scatterers. For example, as a significant precursor to photon localization, the diffusion coefficient could be renormalized in strongly scattering media, while the diffusion constant is relevant to the velocity of light within the scattering medium [14]. Also, in application, such as the optical tomography or the optical inspections for scattering biotissues based on the time-of-flight technique, the velocity of light is a crucial parameter to analyze the observed results [15].

Our experimental setup is schematically illustrated in Fig. 1. In order to investigate the wave-packet propagation under Mie scattering process, we employed a system of a fiber taper coupled with a microsphere. In such a system, the wave packet can be scattered highly selectively and efficiently by a specific WGM. A silica microsphere was fabricated from a standard telecommunication optical fiber [5,16]. First, the fiber was thinned through a wet etching process by a buffered hydrofluoric acid and prepared in a sharp tipped filament of 20 μm diam. The end of the fiber was fused by a CO_2 laser and the microsphere was self-formed by the surface tension. The fiber taper was also fabricated from an optical fiber. The fiber was heated by a traveling flame of an oxygen burner, and stretched from both sides of the fused region [16]. The typical waist diameter in the scattering region was 1 μm. The position of the microsphere was precisely controlled by a piezo-controlled translation stage to enter to the evanescent

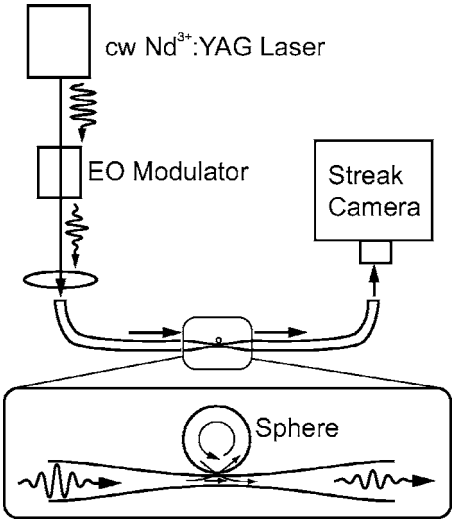

FIG. 1. Schematic illustration of the experimental setup. The inset is the magnified illustration of the coupling region of microsphere and fiber taper.

 ©2006 The American Physical Society

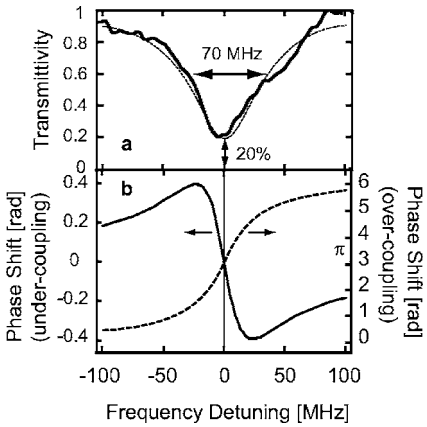

FIG. 2. (a) Resonance dip in the transmission intensity. The solid curve and the dotted curve are the experimental result and the theoretical calculation of the transmittivity as a function of the frequency detuning. (b) Dispersion relations of the transmitted light in the resonance dip. The solid curve and the dashed curve are the theoretical dispersions for the undercoupling and the overcoupling conditions, respectively.

wave region and contacted with the fiber taper. As the light source, we used a single-mode ring cavity diode pumped Nd^{3+}:YAG (yttrium aluminum garnet) laser with a linewidth of 1 kHz. The second harmonics of 532 nm was generated by a periodically polarization modulated $LiNbO_3$ crystal. The laser frequency was tuned by the thermal control of the ring cavity length. The mode-hope-free tuning range was over 10 GHz. The second harmonics was led into an electro-optic (EO) modulator and nearly Gaussian-shaped transform limited pulses were prepared. The pulse width was $\Delta t_p = 65$ ns and the fast Fourier transform of this pulse gives the frequency width of $\Delta\omega_p/2\pi = 10$ MHz. We have an option to operate the laser in a continuous wave (cw) mode by applying an electrical bias to the EO modulator. The incident laser power was reduced to 10 nW in order to avoid nonlinear optical effects. The pulse was led into the fiber taper and the transmitted pulse profile was observed by a streak camera with a time resolution of 10 psec.

The transmission intensity through the fiber-sphere system as a function of incident laser frequency exhibits a sequence of resonance dips due to different mode indexes of the WGMs [17]. Figure 2 shows an example of the observed resonance dip with a sphere of $a = 56.5$ μm in radius. In this measurement, the EO modulator was operated in the cw mode. The dip depth was 80%, while the width was $\delta\omega = 70$ MHz. We examined the pulse transmission as a function of the laser frequency around the resonance dip to demonstrate the negative group delay associated with the single Mie scattering process. Figure 3 shows the temporal profiles of the transmitted pulse observed at the resonance dip. The solid curve is at the bottom of the resonance dip, i.e., the detuning frequency $\Delta\omega/2\pi = 0$ MHz, while the dotted curve is at $\Delta\omega/2\pi = 130$ MHz. The time origin is taken at the pulse peak at the off-resonance frequency. It is noted that the pulse peak at $\Delta\omega/2\pi = 0$ MHz arrives at the streak camera 4.9 ns prior to the time origin. This experimental observation, therefore, indicates that the pulse peak is scattered 4.9 ns before it

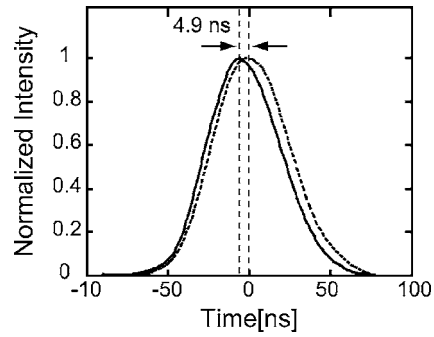

FIG. 3. Temporal profiles of the transmitted pulse observed within the resonance dip shown in Fig. 2(a). The solid curve is at the bottom of the resonance dip, i.e., the detuning frequency $\Delta\omega/2\pi = 0$ MHz, while the dotted curve is at $\Delta\omega/2\pi = 130$ MHz. Both curves are normalized.

arrives at the Mie sphere, thus, the Mie scattering enhances the light velocity. The observed delay time in the resonance line shown in Fig. 2 is summarized in Fig. 4 as a function of the detuning frequency. We performed similar pulse propagation measurements in several resonance lines. The open squares in Fig. 4 show propagation delay in another resonance line with a sphere of 57.5 μm in radius. The delays show a negative delay at the central region of the resonance.

The observed negative delay associated with the Mie scattering can be described by a directional coupling theory [17,18]. The normalized transmitted electric field is then obtained as

$$\frac{E}{E_0} = (1-\gamma)^{1/2}\left(\frac{y - x\exp[-i\phi(\omega)]}{1 - xy\exp[-i\phi(\omega)]}\right) = \sqrt{T(\phi)}\exp\{-i\theta[\phi(\omega)]\}, \quad (1)$$

where

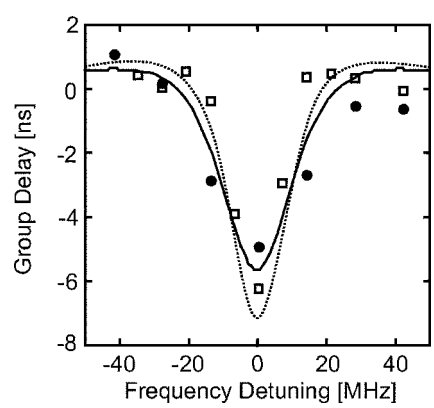

FIG. 4. The solid circles and open squares are observed delay time as a function of the frequency detuning, in the resonance line of 70 MHz (shown in Fig. 2) and 60 MHz, respectively. The solid and dotted curves are the theoretical calculated delay time.

$$x = (1-\gamma)^{1/2}\exp(-\rho/2),$$

$$y = \cos(\kappa). \tag{2}$$

E_0 and E are the input and output electric fields, respectively, γ is the insertion loss, κ is the coupling strength, $\phi(\omega)=nL\omega/c$ is the internal phase shift. Here, n is the effective index, c is the velocity of light in the vacuum, and L is the roundtrip path length of the mode. For the modes with the low radial indexes in the large sphere, we can assume $n=1.458$, the pure silica refractive index, and $L=2\pi a$, respectively. The resonance frequencies of WGMs are complex, hence the modes are radiative or scattering at real frequency. The symbol ρ represents the roundtrip loss in the sphere including intrinsic diffraction loss of WGMs, scattering by the surface roughness, scattering into modes other than the fundamental taper mode, etc. The phase $\theta(\omega)$ of the transmitted electric field is given by

$$\theta(\omega) = \arctan\left(\frac{x\sin[\phi(\omega)](y^2-1)}{-x\cos[\phi(\omega)](1+y^2)+y(1+x^2)}\right). \tag{3}$$

The minimum and maxim of the transmission intensity are

$$T_{max} = (1-\gamma)\frac{(x+y)^2}{(1+xy)^2},$$

$$T_{min} = (1-\gamma)\frac{(x-y)^2}{(1-xy)^2}, \tag{4}$$

respectively, while the resonance width is

$$\delta\phi = 2(1-xy)/\sqrt{xy}. \tag{5}$$

On a critical coupling condition, i.e., $x=y$ where the internal loss and the waveguide coupling are equal at a matched wavelength, the resultant transmission at the output of the waveguide goes to zero on resonance. The dashed curve in Fig. 2(a) represents calculated transmittivity as a function of the laser frequency, where $x=0.999\,725$ and $y=0.999\,895$, which can well fit to the observed resonance, where γ is negligibly small in the experimental condition. It is noted that the transmission dip appears identical, even when x and y are replaced with respect to each other, while one can obtain different dispersion relations as a function of the laser frequency, depending on $x>y$ or $x<y$, which correspond to the overcoupling and the undercoupling conditions, respectively. In Fig. 2(b), we plotted the dispersion relation for $x=0.999\,725$, $y=0.999\,895$ and $x=0.999\,895$, $y=0.999\,725$, respectively. On the undercoupling condition, the negative slope appears in the dispersion relation within the resonance dip. Such a slope means the anomalous dispersion, and the fast light is expected. On the other hand, on the overcoupling condition, the phase increases monotonically when the laser frequency is increased from the negative to the positive off-resonant regions across the resonance dip. The phase shift on the overcoupling condition leads to a large positive delay time. The group delay time of a wave packet is readily calculated as $\tau_d=\partial\theta(\omega)/\partial\omega$. The solid and dashed curves in Fig. 4 show the calculated delay time as a function of the frequency detuning on the undercoupling condition. In accordance with the narrower linewidth in the 57.5-μm sphere, a large negative delay of 6.2 ns was observed. The experimental results excellently agree with the theoretical calculation.

While the directional coupling theory well recaptures the experimental results, the physical origin of the fast light can alternatively be understood in terms of the frequency dependent phase shift in the transmitted light. Generally, the fast light appears when the phase is advanced in the high-frequency side. In dispersive materials, such an additional phase is imparted by the induced dipole in the material. In contrast, in the scattering system, the additional phase is more directly given by the interference between the wave directly transmitted and waves that have been phase shifted by passing through the sphere. At the off-resonance frequency, the multiple circulated waves return to the directional coupling point with different phases depending on the circulation time, and make only a small contribution to the transmitted light. On the other hand, at the resonance frequency, the circulated waves rephase and restore a macroscopic polarization. Below, we discuss the resonance case. On the overcoupling condition, the macroscopic field of the circulated waves is the major component in the transmitted light. Thus, the phase shift in the circulated wave directly appears in the transmitted light. The macroscopic field of the circulated waves changes its phase 2π radian, every time the laser frequency is increased across the resonance frequency, since the angular mode number of the WGM increases in the circular orbit. The phase of the transmitted light, then, jumps 2π radian, every time the laser frequency crosses the resonance. In this regime, $\tau_d=\partial\theta(\omega)/\partial\omega>nL/c$ and the slow light appears. The averaged phase shift as a function of the laser frequency appears as $\langle\theta(\omega)\rangle=nL\omega/c$. On the other hand, on the undercoupling condition, the ballistic component, that is, a direct wave bypassing the sphere is the major component in the transmitted light. The phase imparted by the circulated waves only slightly modifies the propagation constant, and makes $\tau_d=\partial\theta(\omega)/\partial\omega<0$ regions. The averaged phase shift is $\langle\theta(\omega)\rangle=0$ in this case, since the ballistic light bypasses the sphere.

The fast and slow light can also be discussed in the time domain. The circulated pulse is time delayed of the order of the dwell time; $1/\delta\omega=Q/\omega$. On the overcoupling condition, the macroscopic field of the circulated pulse is the major component in the transmitted pulse. The leading edge of the circulated pulse is cancelled by the minor field of the ballistic pulse, which is π radian out of phase with respect to the circulated pulse, resulting in a delayed pulse profile. Reversely, on the undercoupling condition, the tailing edge of the major ballistic pulse is cancelled by the minor field of the circulated pulse, resulting in an advanced temporal profile.

It is interesting to discuss a case that the sphere has gain rather than the loss. Such a case is realistic when gain materials, such as atoms or molecules, are doped in the sphere, or an active layer is functionalized on the sphere surface [5]. On the basis of Eq. (1), when $xy<1$, the dispersion relation of the gain functionalized sphere shows the dispersion relation similar to the overcoupling condition of the naked sphere. At

a condition $xy=1$, the transmission diverges, and the system becomes unstable. This situation corresponds to the laser oscillation in WGMs in the gain functionalized sphere. On the other hand, if we could consider the $xy>1$ case, the dispersion relation shows the negative group delay. Such a behavior is in contrast to the conventional gain medium, since in this system the negative group delay appears within the central region of the gain band.

In conclusion, we observed the negative group delay in the optical wave-packet propagation through the fiber taper coupled with the single Mie sphere. The observed negative group delay under the Mie scattering process agrees excellently with the anomalous dispersion calculated on the basis of the directional coupling theory. From a dispersion engineering point of view [19–22], such structures of fiber taper coupled with Mie spheres are interesting for the electrical or thermal control of the dispersion relation. Mie scattering could exhibit extremely narrow resonances with a frequency width about 10 kHz [23]. Such a narrow resonance could manifest a steep dispersion relation compatible to quantum manipulated atomic systems such as electromagnetically induced transparency [20,19] or double Raman-type resonances [11].

The authors thank T. Noji for assistance in the experiments.

[1] C. F. Bohren and D. R. Huffman, *Absorption and Scattering of Light by Small Particles* (Wiley, New York, 1983).
[2] K. J. Vahala, Nature (London) **424**, 839 (2003).
[3] P. Lodahl *et al.*, Nature (London) **430**, 654 (2004).
[4] S. M. Spillane, T. J. Kippenberg, and K. J. Vahala, Nature (London) **415**, 621 (2002).
[5] L. Yang and K. J. Vahala, Opt. Lett. **28**, 592 (2003).
[6] J. Peatross, S. A. Glasgow, and M. Ware, Phys. Rev. Lett. **84**, 2370 (2000).
[7] A. I. Talukder, T. Haruta, and M. Tomita, Phys. Rev. Lett. **94**, 223901 (2005).
[8] S. Chu and S. Wong, Phys. Rev. Lett. **48**, 738 (1982).
[9] A. M. Steinberg, P. G. Kwiat, and R. Y. Chiao, Phys. Rev. Lett. **71**, 708 (1993).
[10] D. R. Solli, C. F. McCormick, C. Ropers, J. J. Morehead, R. Y. Chiao, and J. M. Hickmann, Phys. Rev. Lett. **91**, 143906 (2003).
[11] L. J. Wang, A. Kuzmich, and A. Dogariu, Nature (London) **406**, 277 (2000).
[12] M. D. Stenner, D. J. Gauthierand, and M. A. Neifeld, Nature (London) **425**, 695 (2003).
[13] Md. A. I. Talukder, Y. Amagishi, and M. Tomita, Phys. Rev. Lett. **86**, 3546 (2001).
[14] D. S. Wiersma, P. Bartolini, A. Lagendijk, and R. Righini, Nature (London) **390**, 671 (1997).
[15] *Biomedical Optical Imaging*, edited by J. G. Fujimoto (Academic, New York, 2005).
[16] J. C. Knight, G. Cheung, F. Jacques, and T. A. Birks, Opt. Lett. **22**, 1129 (1997).
[17] M. Cai, O. Painter, and K. J. Vahala, Phys. Rev. Lett. **85**, 74 (2000).
[18] L. F. Stokes, M. Chodorow, and H. J. Shaw, Opt. Lett. **7**, 288–290 (1982).
[19] L. V. Hau, S. E. Harri, Z. Dutton, and C. H. Behroozi, Nature (London) **397**, 594 (1999).
[20] C. Liu, Z. Dutton, C. H. Behroozi, and L. V. Hau, Nature (London) **409**, 490 (2001).
[21] J. E. Heebner, R. W. Boyd, and Q-H. Park, Phys. Rev. E **65**, 036619 (2002).
[22] Y. A. Vlasov, M. O'Boyle, H. F. Hamann, and S. J. McNab, Nature (London) **438**, 65 (2005).
[23] A. A. Savchenkov, V. S. Ilchenko, A. B. Matsko, and L. Maleki, Phys. Rev. A **70**, 051804(R) (2004).